12V Lead Acid Battery Voltage Monitor

Description

12V Lead Acid Battery Monitor is a simple project which tells you the voltage of your Lead acid battery visually with the help of 10 LED's. This project is based on the popular LM3914 IC from Texas Instruments.

The LM3914 senses the voltage level at the input pin and drives the 10 light emitting diodes based on the voltage detected on input connector. Circuit works on same battery, doesnt not require separate supply input. Jumper is used to select the DOT mode or bar graph mode.

Specifications

- Supply input 15 VDC Max
- Maximum and Minimum range selectable with onboard preset
- Output 10 LED's
- 2 Types of display Bar and Dot selectable by a jumper
- Very low current consumption, typical 100 mA
- Header connector for connecting power / voltage in
- Four mounting holes of 3.2 mm each
- PCB dimensions 37 mm x 75 mm

Schematic

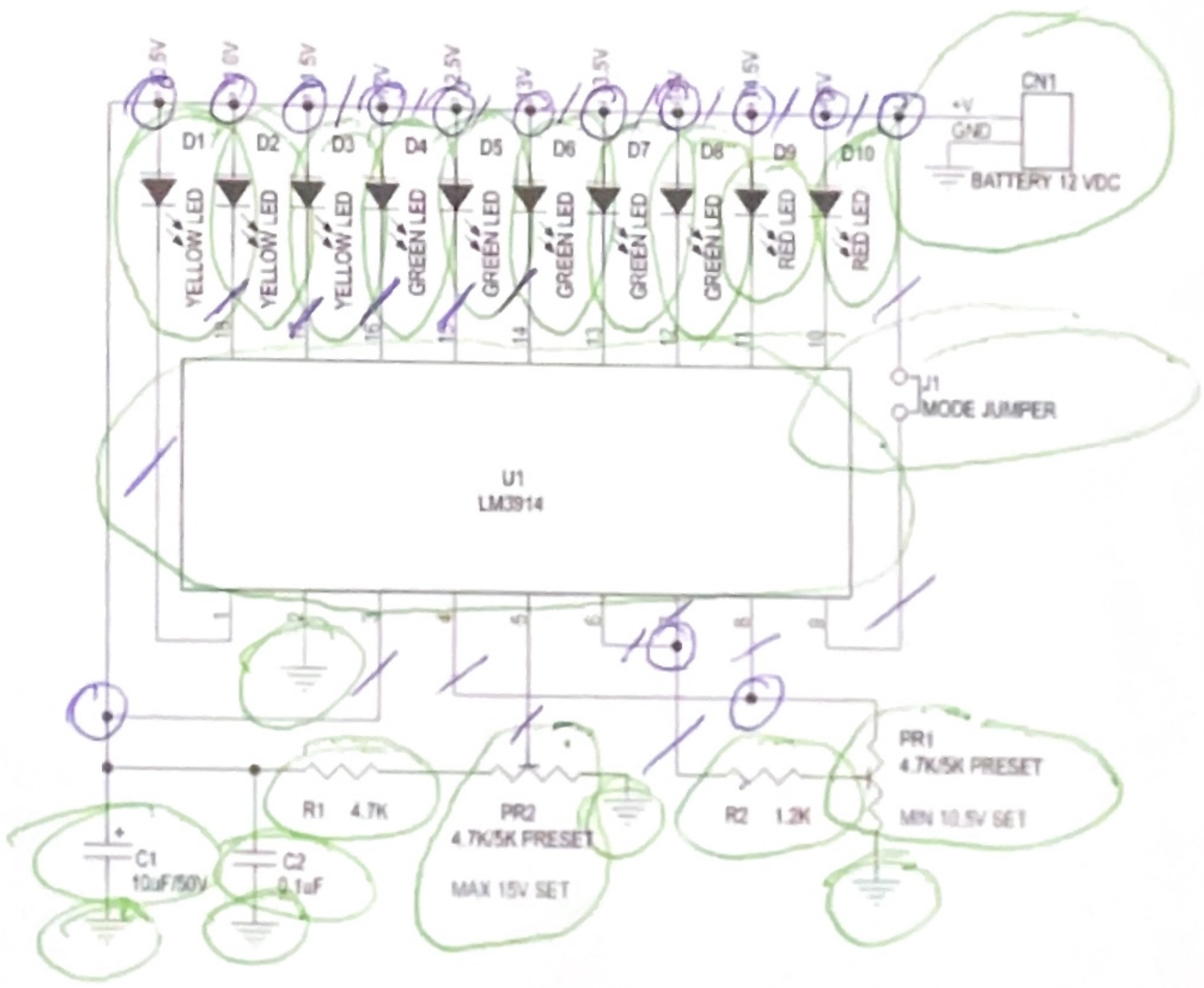

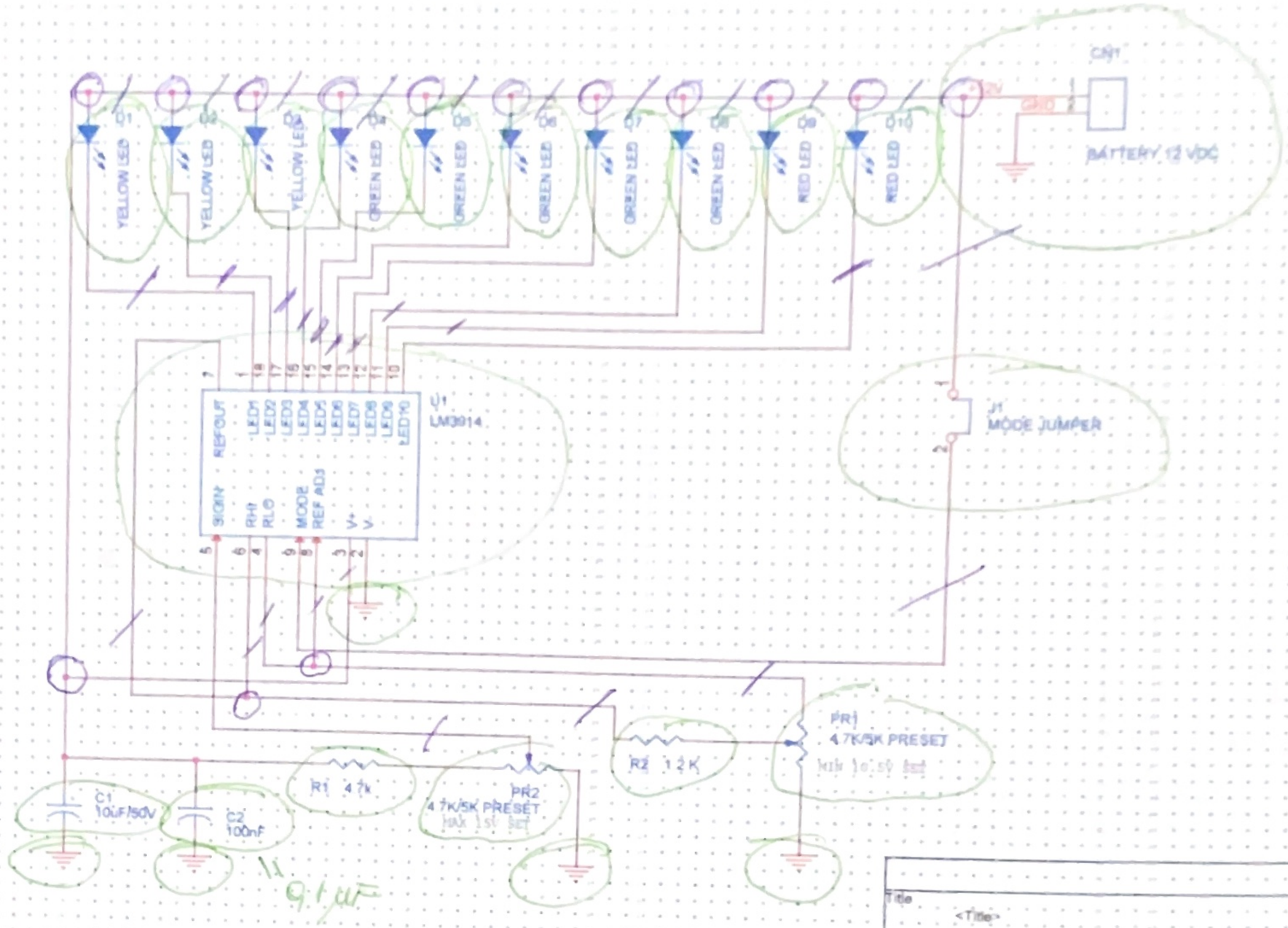

Title	<Title>		
Size A	Document Number <Doc>		Rev <RevCode>
Date	Sunday, November 17, 2024	Sheet 1 of 1	